order@nomo.se | +45 44 20 86 00 | https:nomo.dk

6013 Z-NSK SPORKUGLELEJE ENRADET MED EN METALTÆTNING

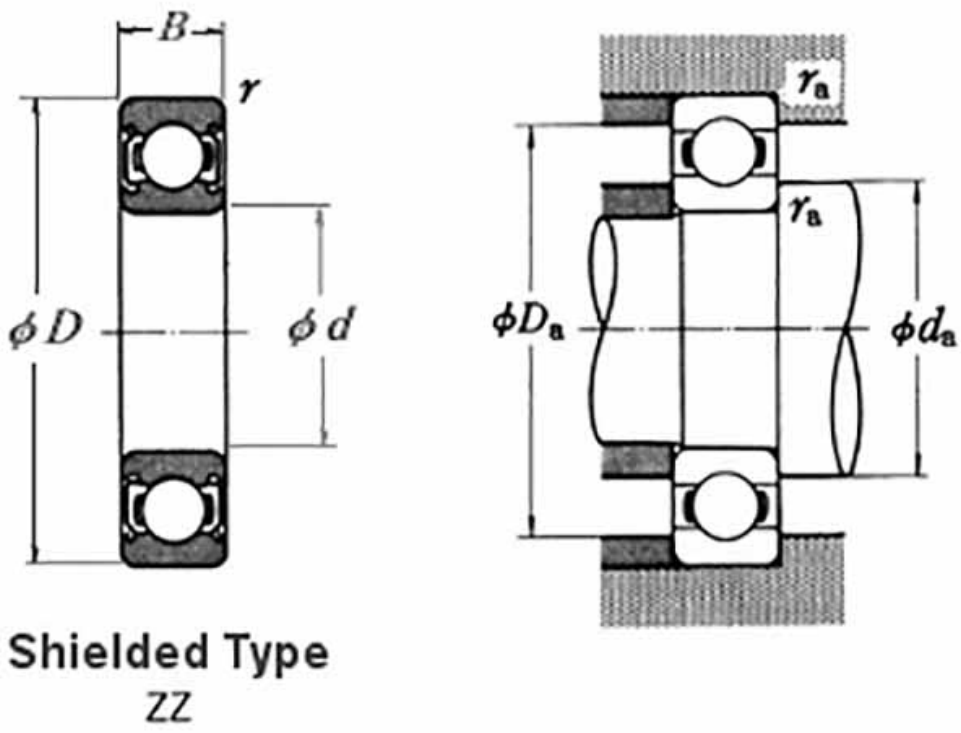

High quality Deep groove ball bearing, steel shielded on one side from the world leader NSK, the worlds largest ball bearing manufacturer offering unparalelled quality

Basic dimensions

Width [B]	18.00	mm
Inner diameter [d]	65.00	mm
Outer diameter [D]	100.00	mm

Other data

Seal type	One Metal Shield Z